Technical Summary

Universal Dome Camera Mount

JH243

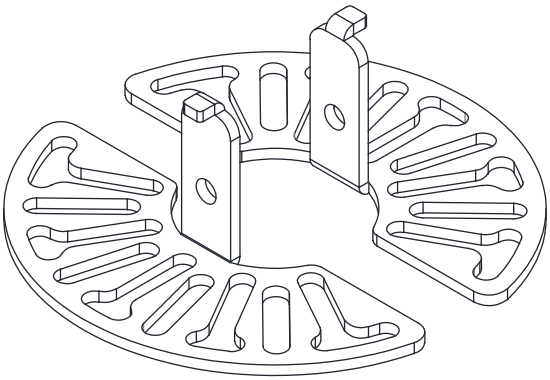

PRODUCT DIMENSION

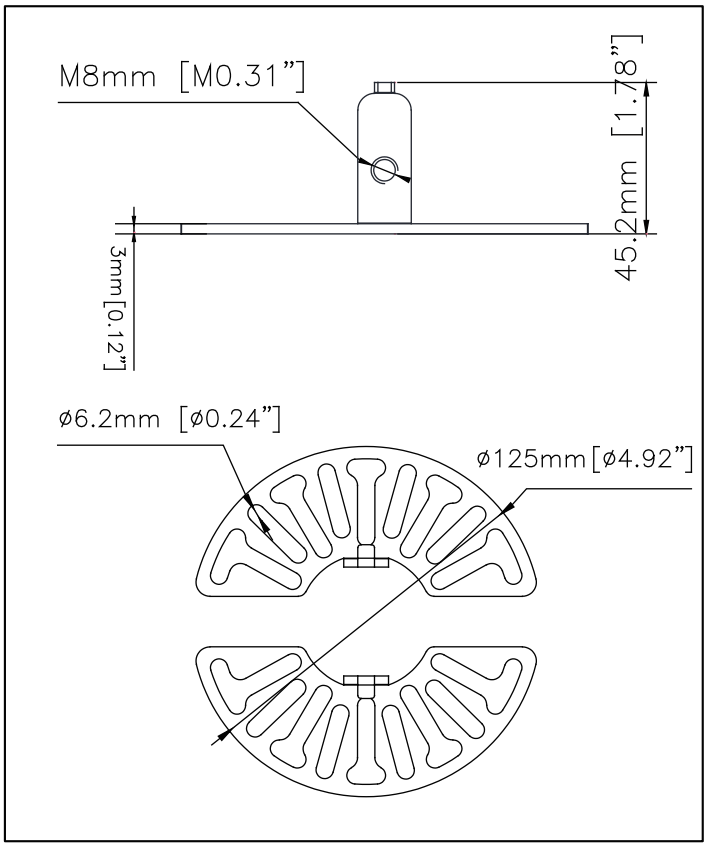

COMPONENT CHECKLIST

B1	B2	B3	B4	B5	B6
M8X10 X2	M4X12 X4	M4X25 X4	M4 X4	Ø13XØ5.2X1.5 X8	5mm X1

INSTALLATION INSTRUCTIONS

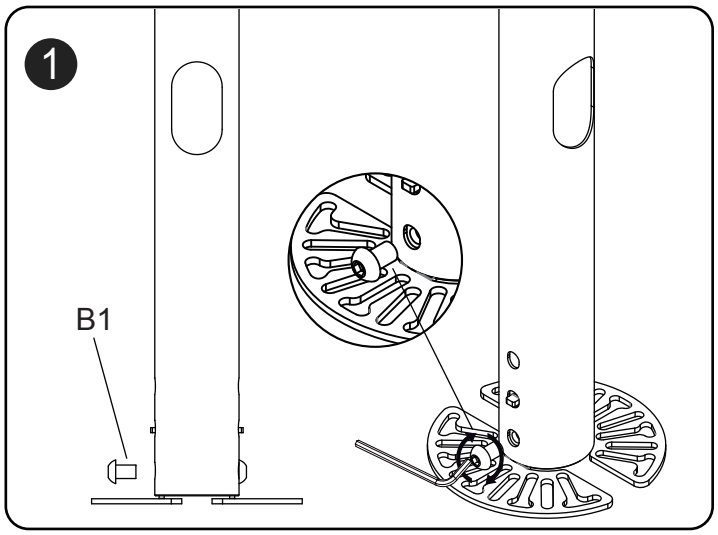

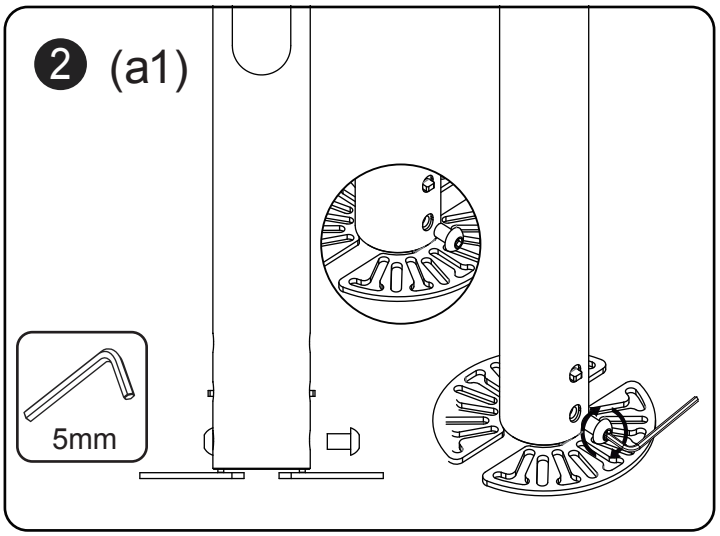

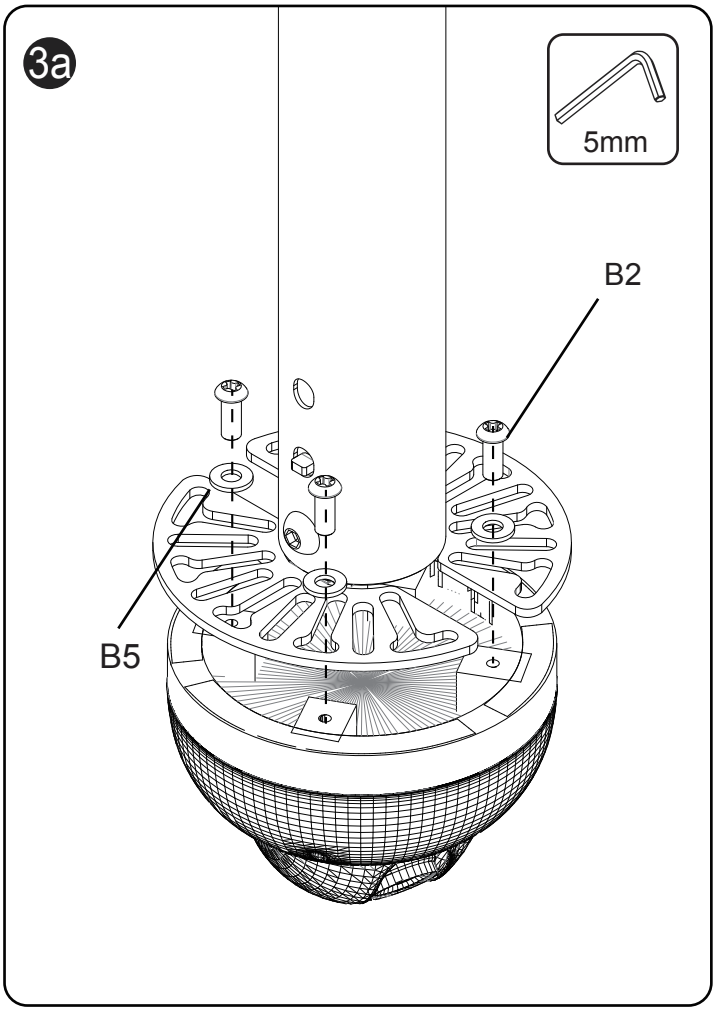
3a
5mm
B2
B5

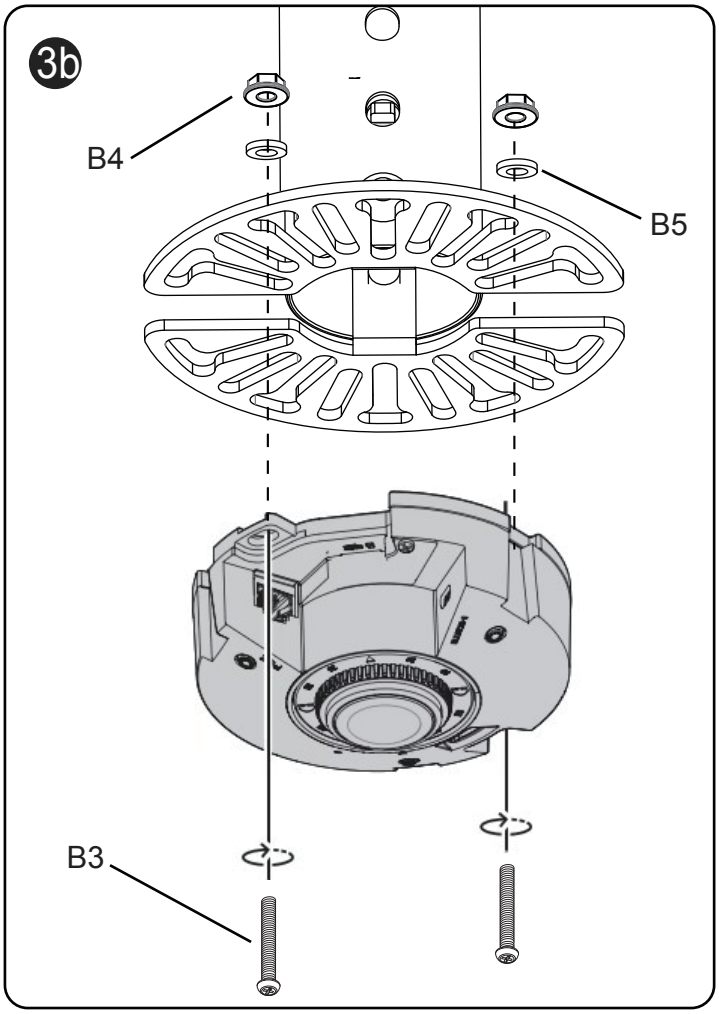
3b
B4
B5
B3