INSTALLATION GUIDE

GKD-200

Support 32" to 75" Screen Size

Max Load Capacity: 110lbs (50 kg)

VESA 100x100mm / 400x400mm compatible

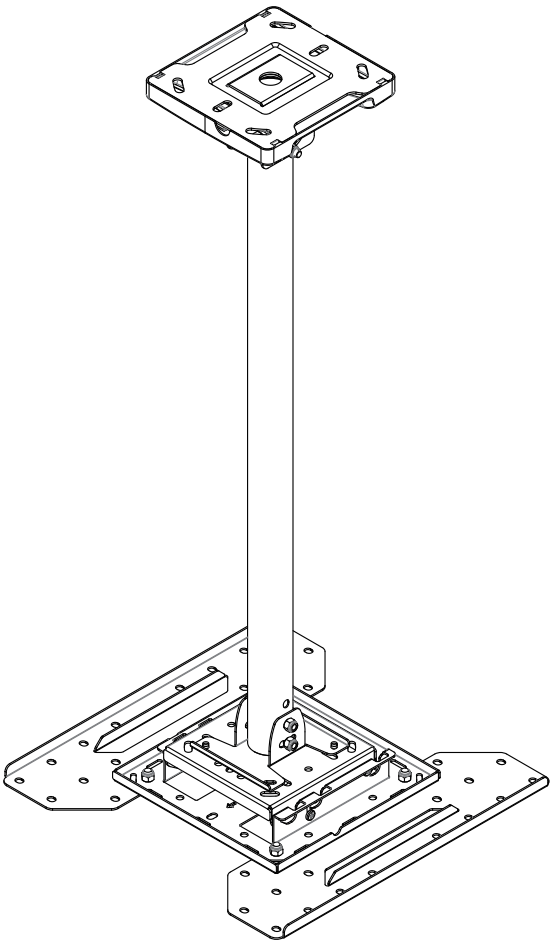

⚠ WARNING

- Be sure to read this entire manual thoroughly and you fully understand all the instructions and warning before attempting to begin your installation.
- This product should only be installed by someone who has a basic knowledge of building construction,installations and fully understands these instructions.
- Always have someone assist you to lift and position your equipment.
- Tighten screws and bolts firmly, but do not over tighten. Over tightening can damage the items and greatly reduce their ability to hold. Please refer to suggested torque values where applicable in these instructions.

Dimensions

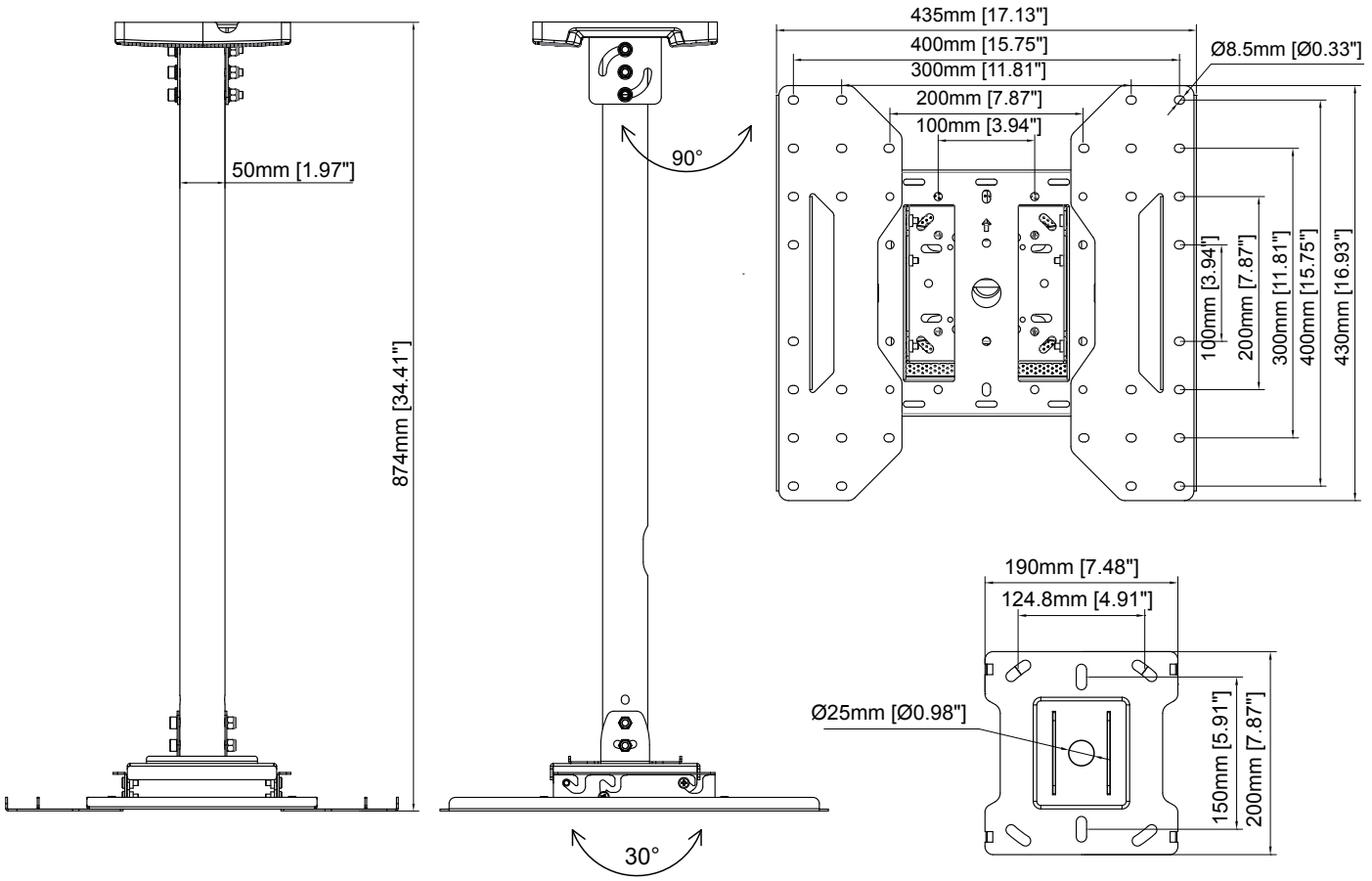

Parts list

A1	A2	A3	A4	A5	A6	A7
M5X15	M6X15	M8X25	Ø16XØ6.2X1.5	M8X45	Ø16XØ8.2X1.5	Ø13XØ8.2X13
X4	X4	X4	X4	X4	X4	X4

X1

B1	B2	B3		B4	B5		B6
M6 x16mm	M8	M8X70	Ø16x Ø8.2x1.5	Open-wrench	Ø16x Ø8.2x1.5	Lag bolt	Anchor
X2	X5	X5	X8	X1	X6	X6	X6

X1

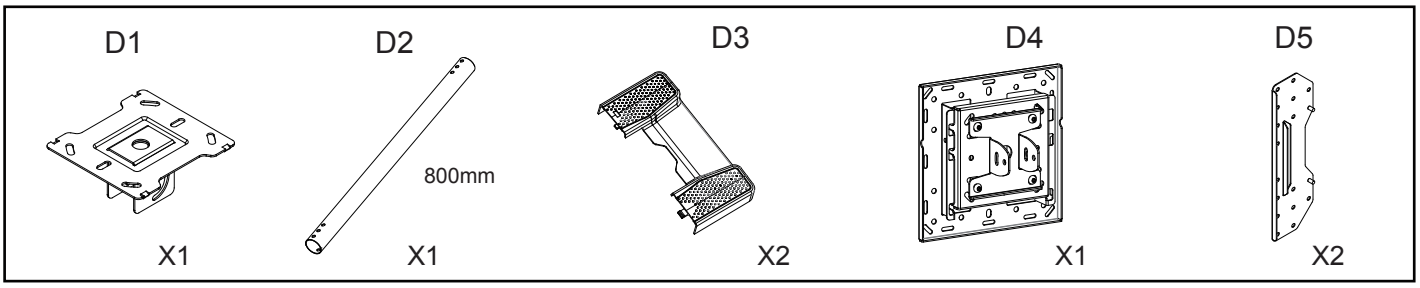

Installation

1

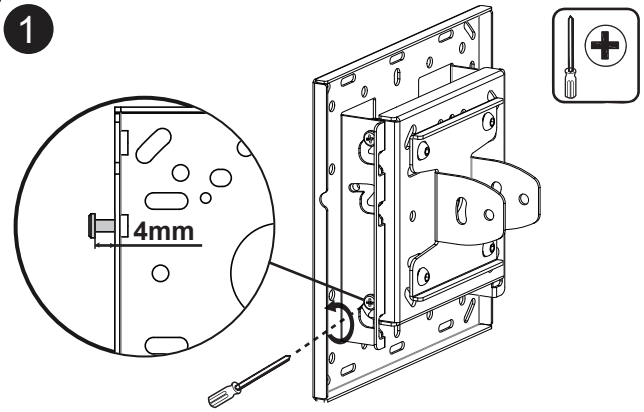

2

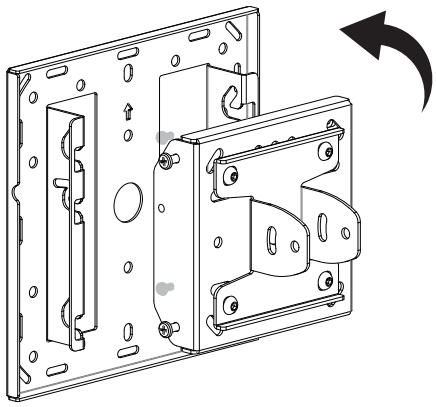

3

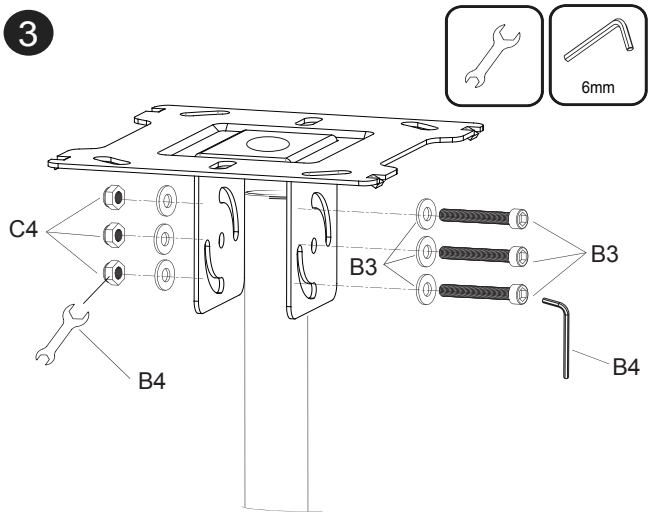

4

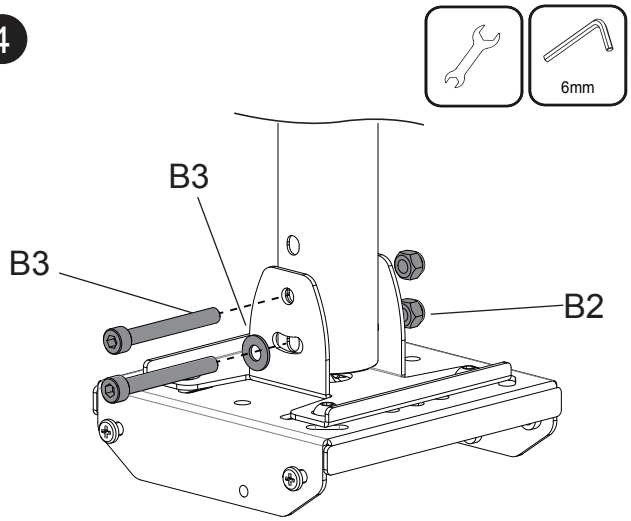

5 BRICK OR CONCRETE

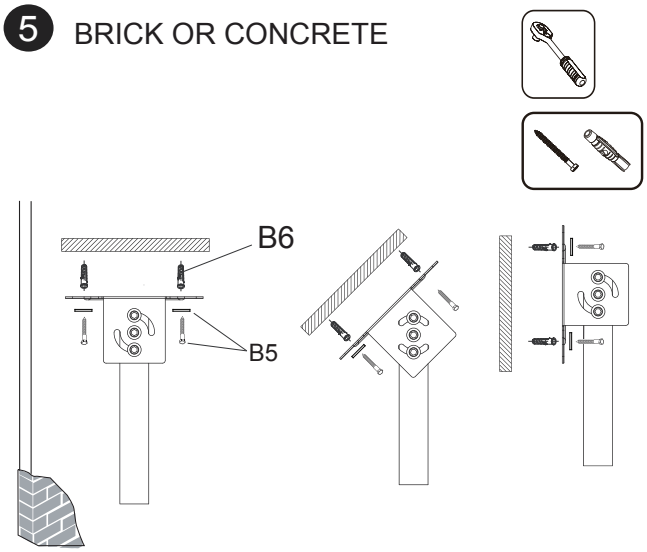

6 WOOD

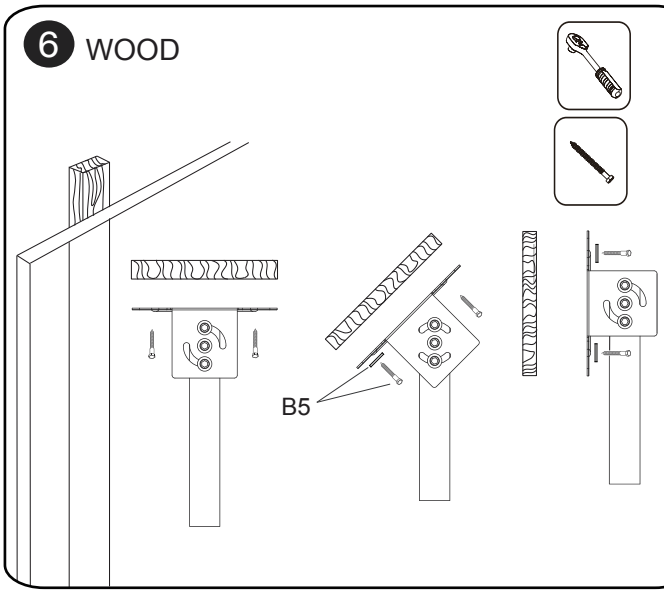

7

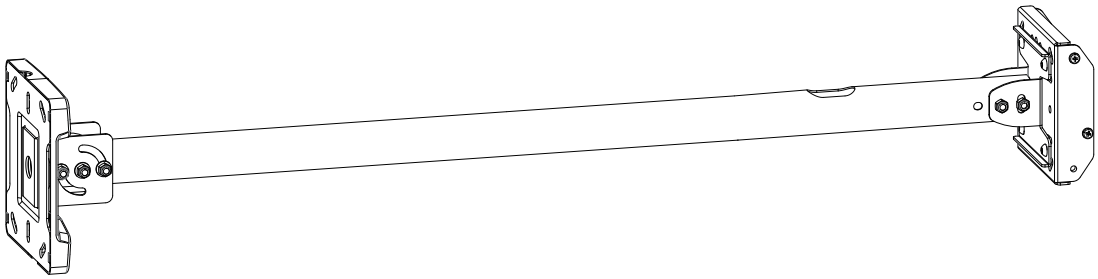

8 -a Attaching the TV to the VESA Plate VESA 100×100~200×200

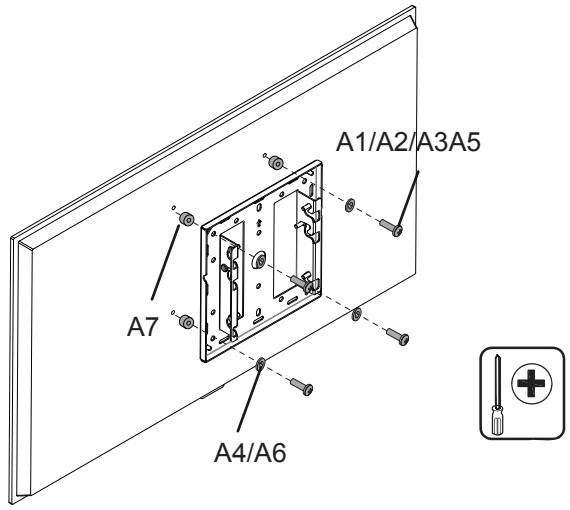

8 -b Attaching the TV to the VESA Plate VESA 200×200~400×400

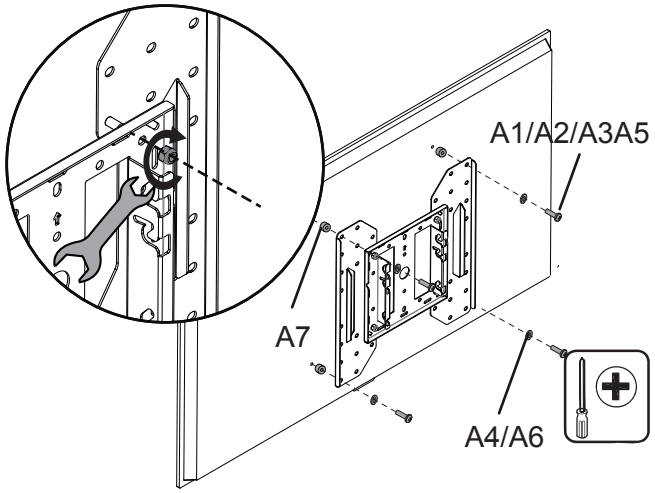

9

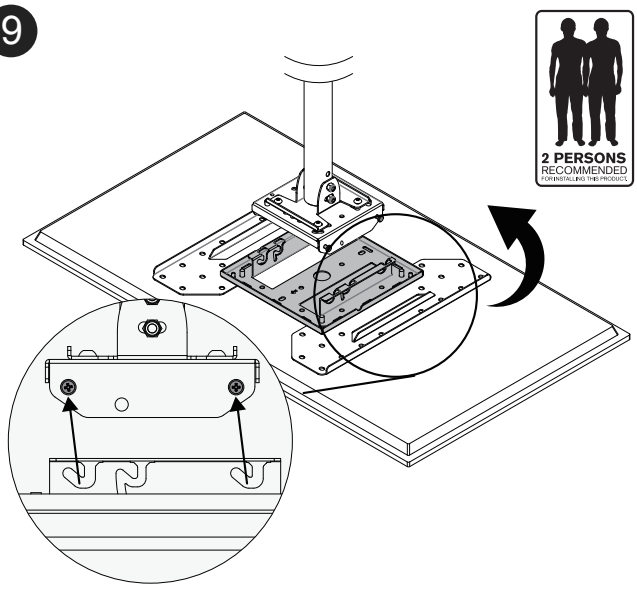

10

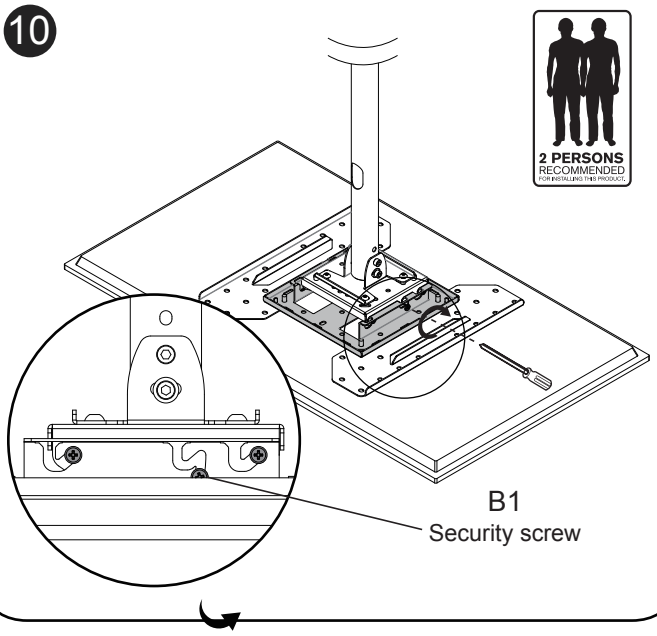

11

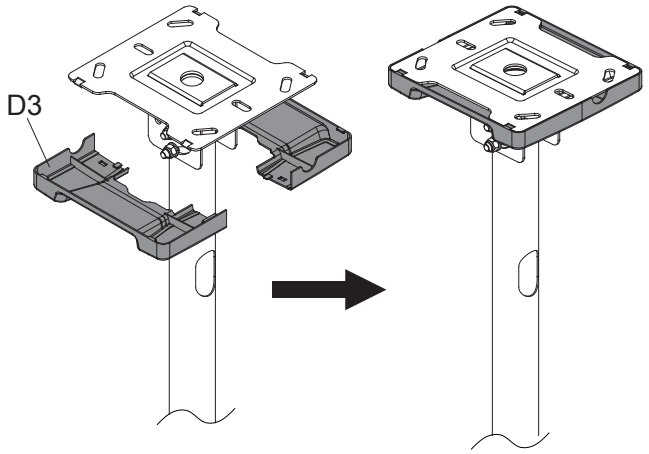
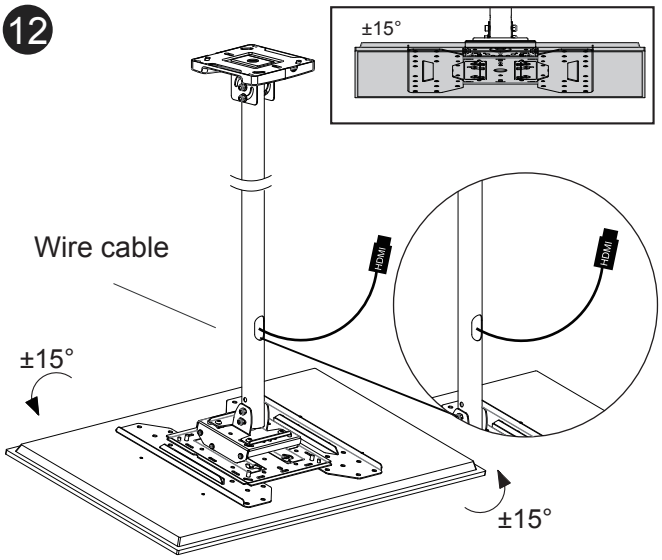
12